| REF | LOC | REF | LOC | REF | LOC | REC | LOC | REC | LOC |
|---|---|---|---|---|---|---|---|---|---|
| IC4001 | I4 | IC4284 | E2 | Q4001 | I3 | Q4384 | C3 | Q4511 | A2 |
| IC4002 | I5 | IC4341 | E1 | Q4061 | H3 | Q4385 | C3 | Q4512 | A2 |
| IC4061 | I4 | IC4342 | E2 | Q4225 | G2 | Q4461 | D1 | Q4513 | A2 |
| IC4062 | H4 | IC4345 | E2 | Q4230 | G2 | Q4462 | D1 | QR4001 | I3 |
| IC4124 | J2 | IC4381 | B1 | Q4285 | F2 | Q4463 | D1 | QR4002 | I3 |
| IC4125 | I2 | IC4382 | C1 | Q4290 | F2 | Q4502 | A2 | QR4061 | H3 |
| IC4126 | H2 | IC4383 | C1 | Q4341 | E3 | Q4503 | A2 | QR4062 | H3 |
| IC4131 | I2 | IC4386 | C2 | Q4344 | E3 | Q4504 | B2 | QR4191 | F1 |
| IC4191 | F1 | IC4461 | D1 | Q4345 | E2 | Q4505 | A1 | QR4341 | E4 |
| IC4194 | G1 | IC4466 | D2 | Q4346 | D2 | Q4506 | B1 | QR4342 | E4 |
| IC4195 | E1 | IC4551 | F4 | Q4347 | D3 | Q4507 | A2 | QR4381 | C3 |
| IC4221 | G4 | IC4552 | G4 | Q4348 | E3 | Q4508 | A2 | | |
| IC4222 | G4 | IC4555 | E4 | Q4349 | E3 | Q4509 | B2 | | |
| IC4226 | G2 | IC4556 | F4 | Q4350 | D3 | Q4510 | B2 | | |

(FOIL SIDE)

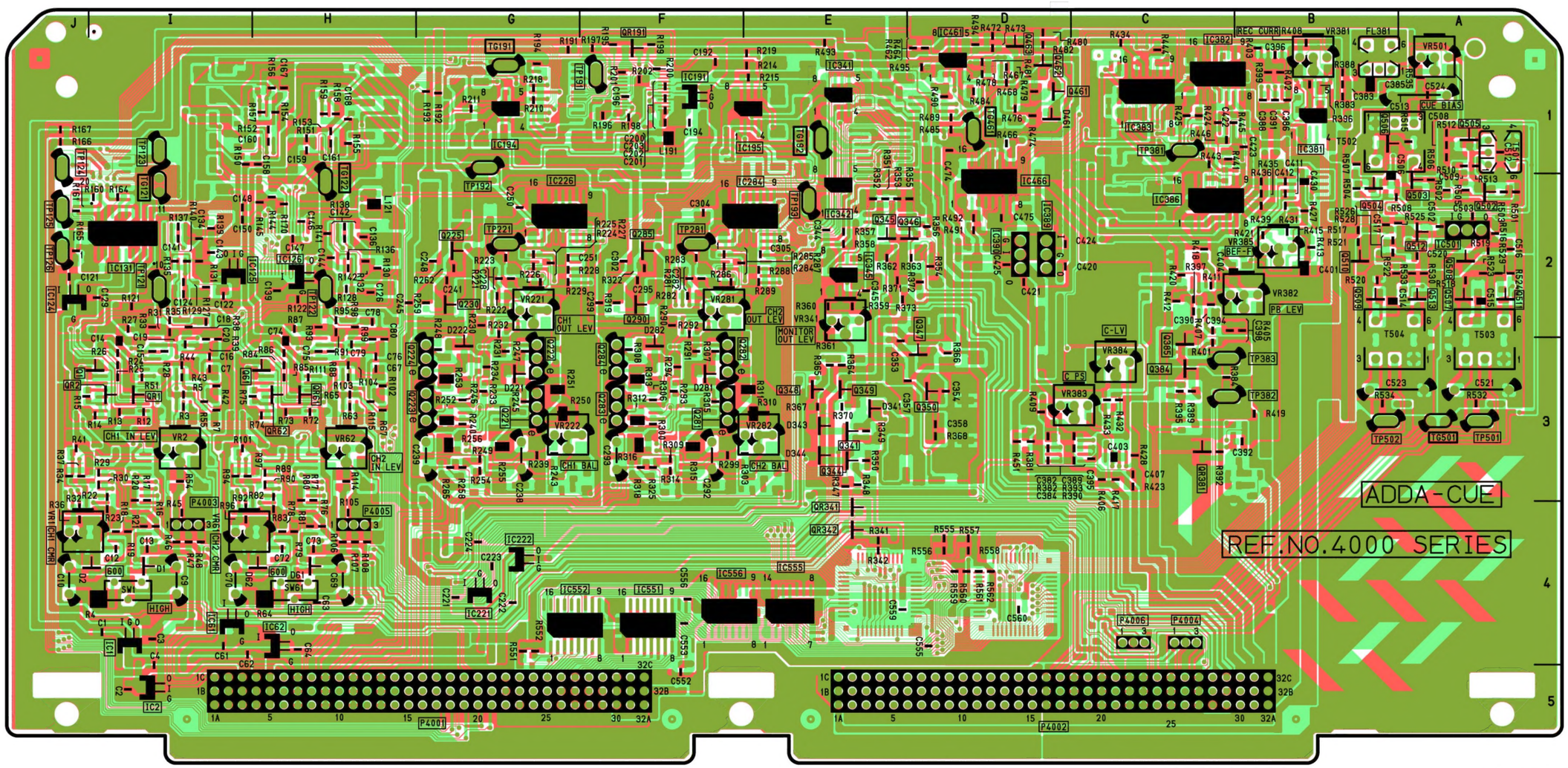


(FOIL SIDE)

| REF | LOC | REF | LOC | REF | LOC | REF | LOC | REF | LOC | REF | LOC |
|---|---|---|---|---|---|---|---|---|---|---|---|
| IC4003 | I3 | IC4193 | F1 | IC4501 | A2 | Q4282 | F3 | TG4122 | H2 | TP4502 | B3 |
| IC4004 | I4 | IC4223 | G2 | IC4553 | F4 | Q4283 | F3 | TG4191 | G1 | VR4001 | J4 |
| IC4005 | I3 | IC4224 | G2 | IC4554 | G4 | Q4284 | F3 | TG4192 | E1 | VR4002 | I3 |
| IC4006 | J3 | IC4225 | G3 | IC4557 | E4 | Q4286 | E3 | TG4461 | D1 | VR4061 | I4 |
| IC4007 | I3 | IC4281 | F2 | IC4558 | D4 | Q4287 | E3 | TG4501 | A3 | VR4062 | H3 |
| IC4008 | I3 | IC4282 | E2 | P4001 | G5 | Q4288 | F3 | TP4121 | I2 | VR4221 | G2 |
| IC4063 | H3 | IC4283 | F3 | P4002 | D5 | Q4289 | F3 | TP4122 | H2 | VR4222 | G3 |
| IC4064 | H4 | IC4343 | E2 | P4003 | I4 | Q4342 | E3 | TP4123 | I1 | VR4281 | F2 |
| IC4065 | H3 | IC4344 | E1 | P4004 | C4 | Q4343 | E3 | TP4124 | J1 | VR4282 | E3 |
| IC4066 | I3 | IC4384 | C2 | P4005 | H4 | Q4381 | B3 | TP4125 | J2 | VR4341 | E2 |
| IC4067 | H3 | IC4385 | B2 | P4006 | C4 | Q4382 | C3 | TP4126 | J2 | VR4381 | B1 |
| IC4068 | H3 | IC4388 | C1 | Q4221 | G3 | Q4383 | B3 | TP4191 | F1 | VR4382 | B2 |
| IC4121 | I2 | IC4389 | D2 | Q4222 | G3 | Q4386 | C3 | TP4192 | G1 | VR4383 | C3 |
| IC4122 | H2 | IC4390 | D2 | Q4223 | G3 | Q4501 | A2 | TP4193 | E2 | VR4384 | C3 |
| IC4123 | I2 | IC4391 | D3 | Q4224 | G3 | QR4382 | C3 | TP4221 | G2 | VR4385 | B2 |
| IC4127 | I2 | IC4392 | C3 | Q4226 | F3 | SW4001 | I4 | TP4281 | F2 | VR4501 | A1 |
| IC4128 | H2 | IC4462 | D1 | Q4227 | G3 | SW4061 | H4 | TP4381 | C1 | | |
| IC4129 | H1 | IC4463 | D1 | Q4228 | G3 | SW4381 | B1 | TP4382 | C3 | | |
| IC4130 | H1 | IC4464 | D1 | Q4229 | G3 | SW4382 | C1 | TP4383 | C3 | | |
| IC4192 | G1 | IC4465 | D2 | Q4281 | F3 | TG4121 | I2 | TP4501 | A3 | | |

(COMPONENT SIDE)

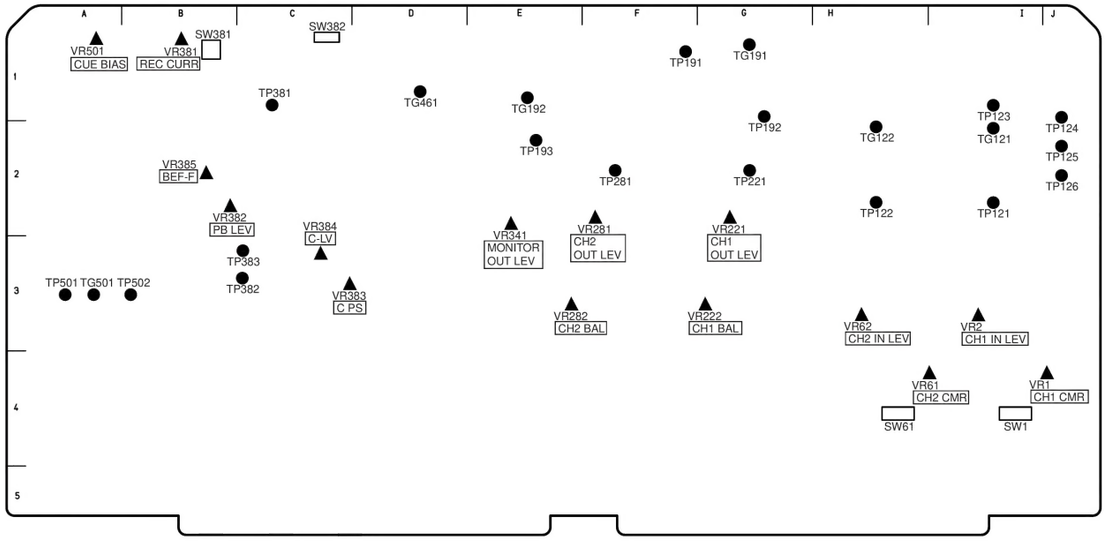


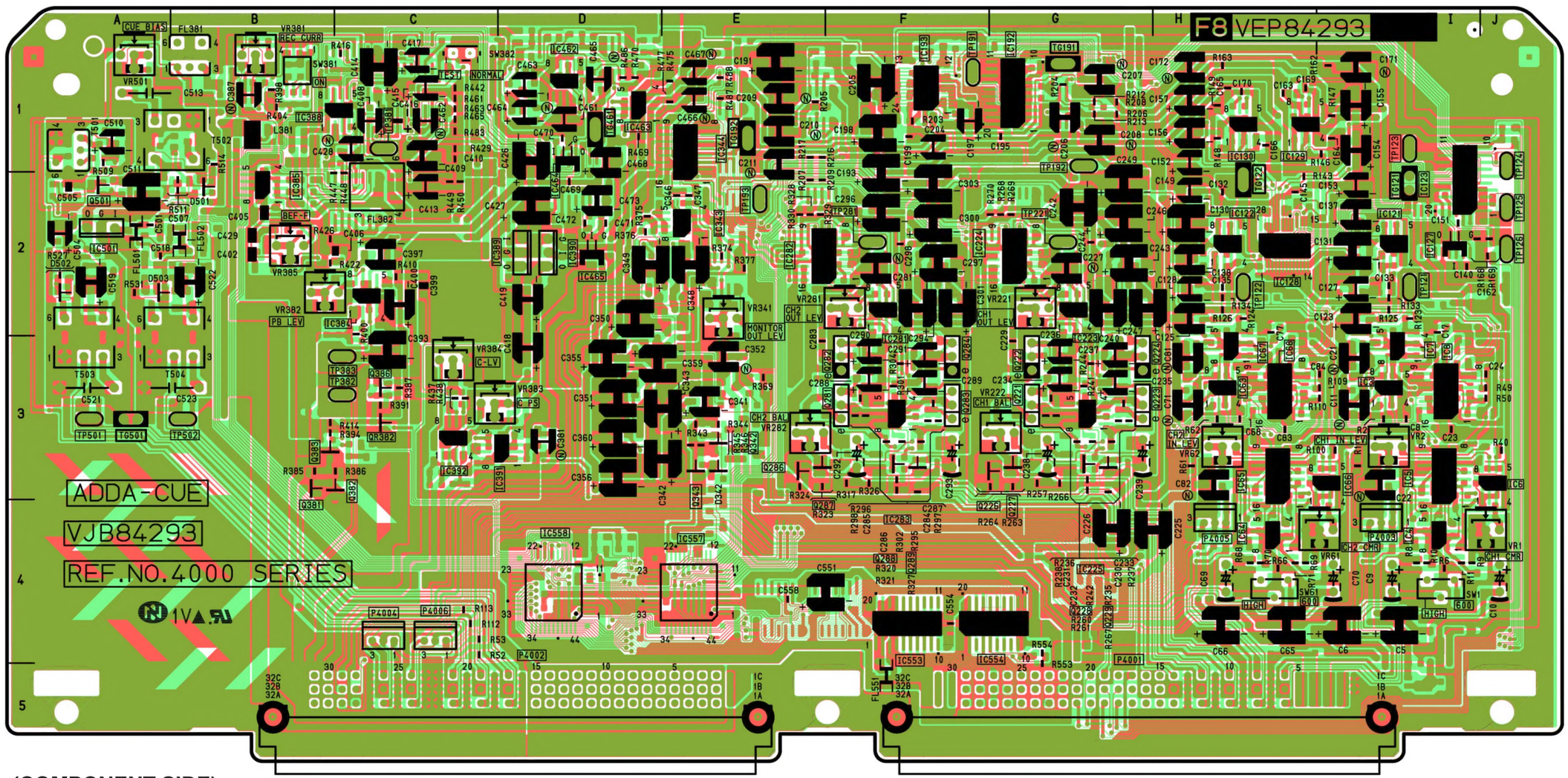


(COMPONENT SIDE)